Franke A600 FM EC - PPSU preventative maintenance

All 40,000 cups or 12 months

$1347.60 exc. GST

Effective 1st September 2025. Price shown in AUD and are subject to change without notice.

560.0531.239 PM kit, B1

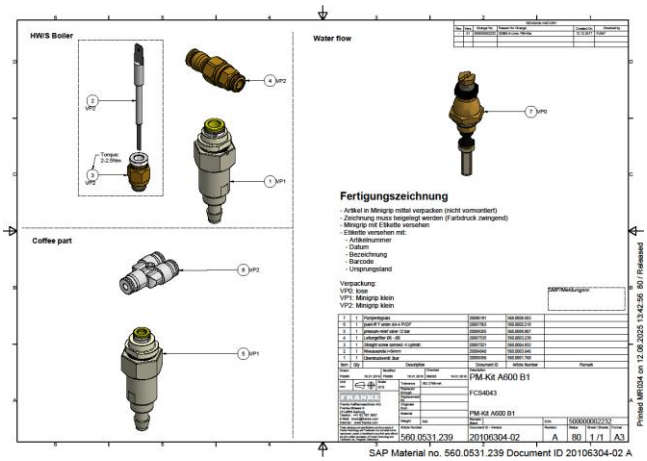

560.0743.011 PM kit, EC2

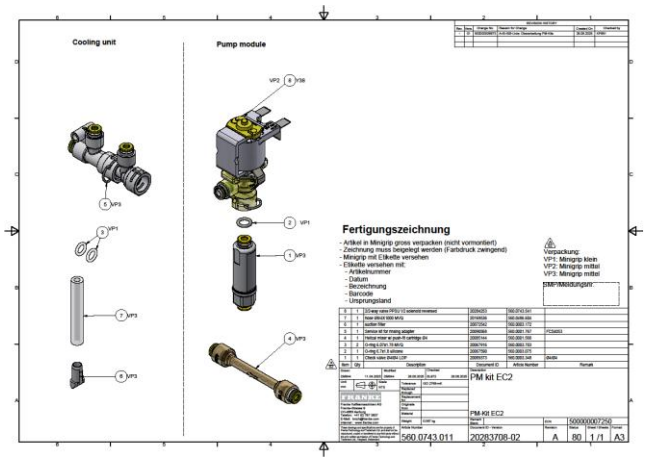

560.0599.680 PM kit, powder

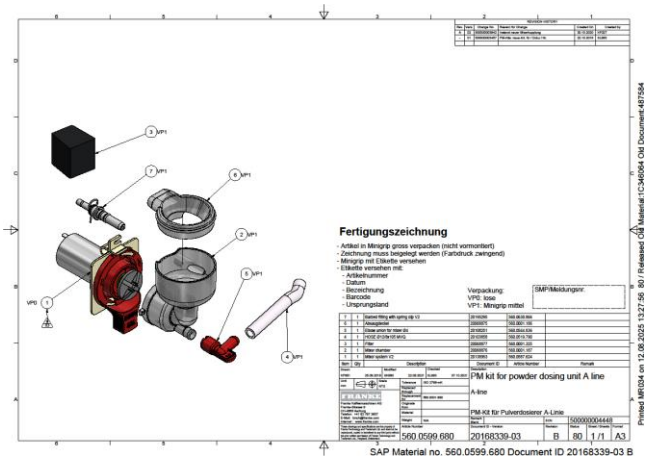

560.0599.685 PM kit, brewing unit, 50E

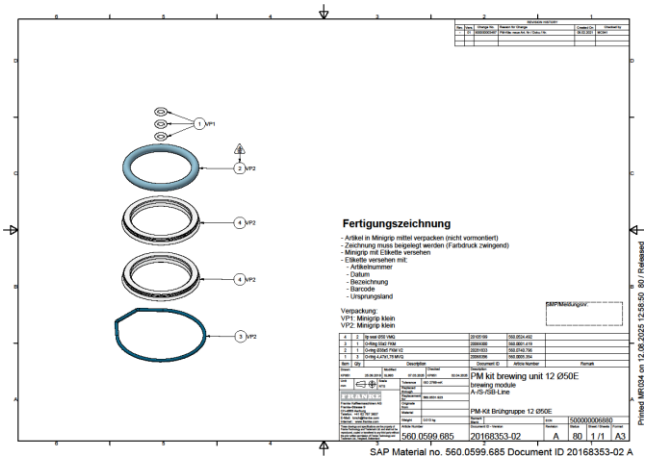

Scope of Works

SYDNEY OFFICE | 14-18 Skinner Avenue Riverwood NSW 2210 | T +61 2 9533 2693
MELBOURNE OFFICE | 13 Constance Ct, Epping 3076 | T +61 3 9462 5055
parts@cwe.com.au | www.cwe.com.au